Schematic:

REV.	ECN NO.	DESCRIPTION	DATE	APPD
A	REL		2013/06/22	

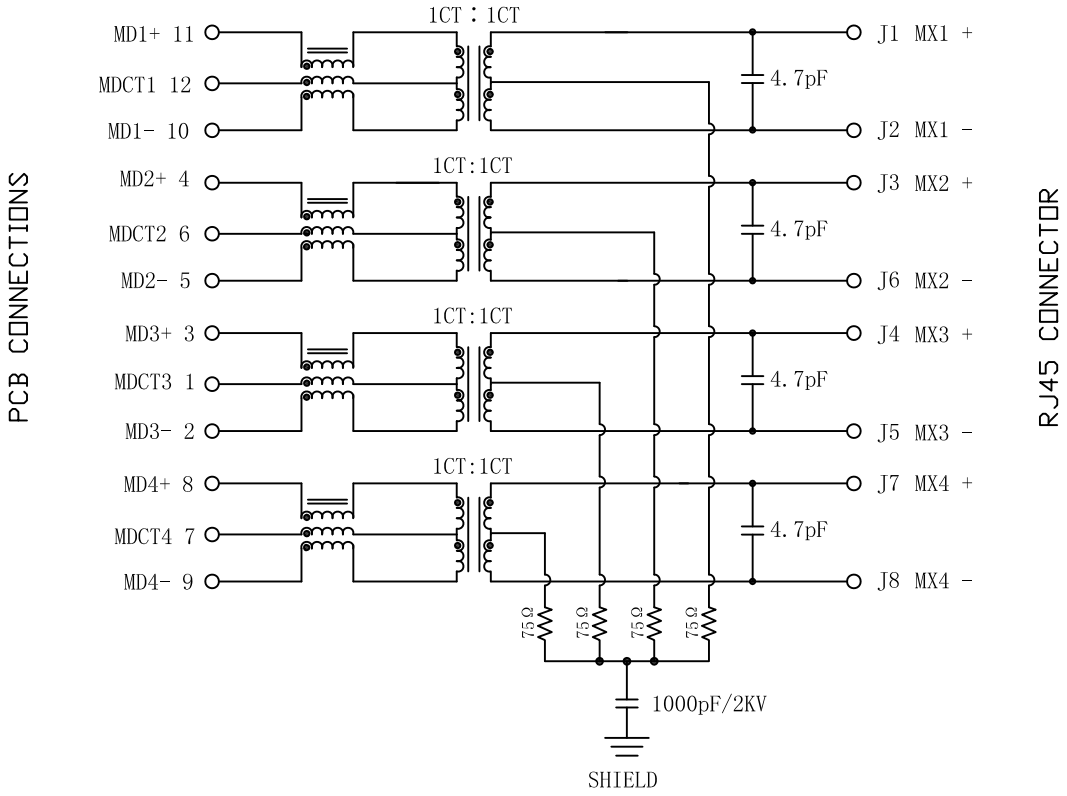

Electrical Specification @25℃

1. Turns Ratio (±2%) : 1CT : 1CT
2. OCL: 350uH Min @100KHz/100mVrms
   8mA DC Bias (0℃-70℃)
3. Insertion Loss(dB Max):
   0.1～1MHz:-1.1 1～65MHz:-0.5
   65～100MHz:-10.8 100～125MHz:-1.2
4. Return Loss(dB Min @100Ω±15%):
   0.5～40MHz:-18
   40～100MHz:-12+20LOG(f/80MHz)
5. CM to CM Rej(dB Min):
   0.1～100MHz:-30dB Min
6. CM to DM Rej:
   1～125MHz:-35dB Min
7. Hipot: 1500Vrms
8. Operating Temperature: 0℃～+70℃.

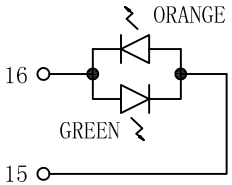

LEFT LED

LED POLARITY		COLOR
PIN 15	PIN 16	
+	-	ORANGE
-	+	GREEN

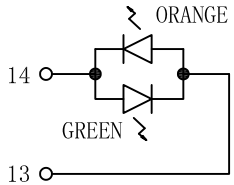

RIGHT LED

LED POLARITY		COLOR
PIN 13	PIN 14	
+	-	ORANGE
-	+	GREEN

RoHS 2002/95/EC

X:X	±0.20	APPD:	LINK-PP INT'L TECHNOLOGY CO., LIMITED
X:XX	±0.10	CHKD:	
X:XXX	±0.05	DR: TOM	TITLE: RJ45 Connector With 1000 Base-TX Integrated Magnetic
ANGLES	±1°	UNIT: mm	PART NO.: LPJK7039A55NL
	SCALE: 2/1	SHEET: 1/2	REV: A DWG: LP13062213

Mechanical:

REV.	ECN NO.	DESCRIPTION	DATE	APPD
A	REL		2013/06/22	

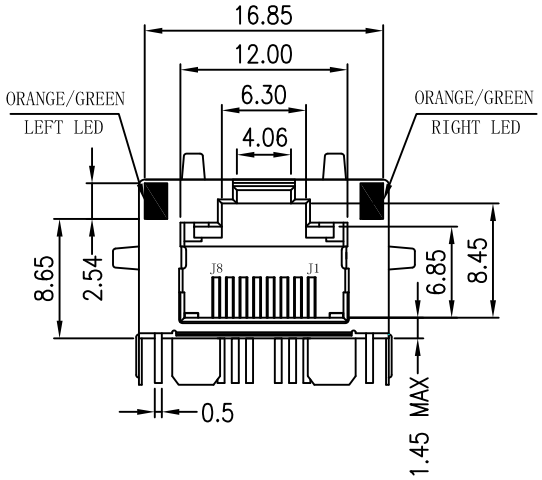

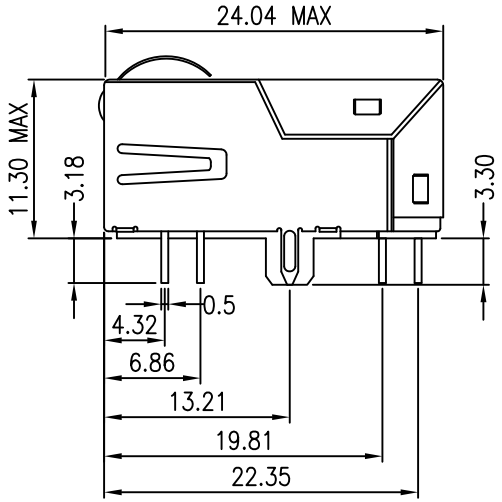

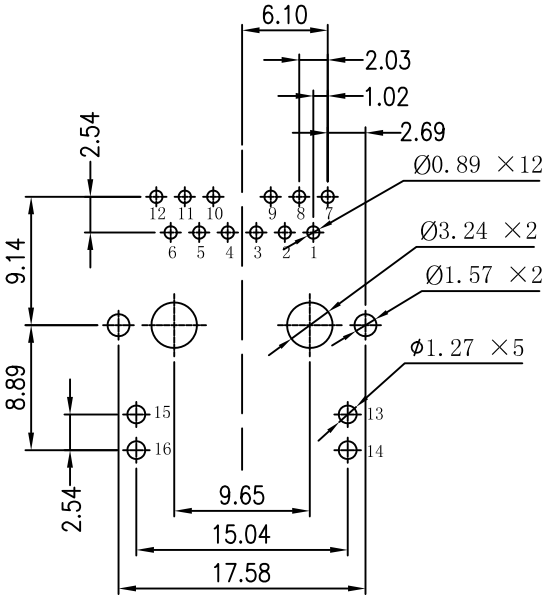

SUGGESTED PCB LAYOUT(TOP VIEW)

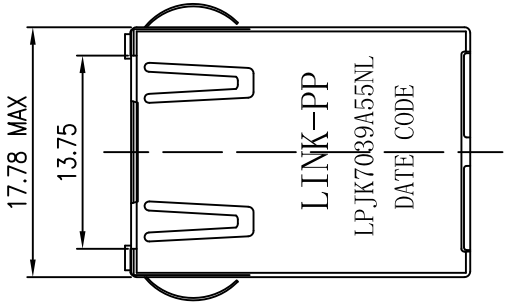

NOTES:

1. Designed to support application, such as SOHO(ADSL modems), LAN-on-Motherboard(LOM), hub and Switches.
2. Meets IEEE 802.3 specification
3. Connector Materials:
   Housing:Thermoplastic UL94V-0
   Contact/Shield: Copper alloy
   Shield plating: Nickel
   Contact plating: Gold 6 micro-inches min. In contact area.
4. Wave peak temperature: 260℃, 5Sec.

RoHS 2002/95/EC

X:X	±0.20	APPD:	LINK-PP INT'L TECHNOLOGY CO., LIMITED
X:XX	±0.10	CHKD:	
X:XXX	±0.05	DR: TOM	TITLE: RJ45 Connector With 1000 Base-TX Integrated Magnetic
ANGLES	±1°	UNIT: mm	PART NO.: LPJK7039A55NL

SCALE:	SHEET:	REV:	DWG:
2/1	2/2	A	LP13062213