Schematic:

REV.	ECN NO.	DESCRIPTION	DATE	APPD
A	REL		2015-05-21	

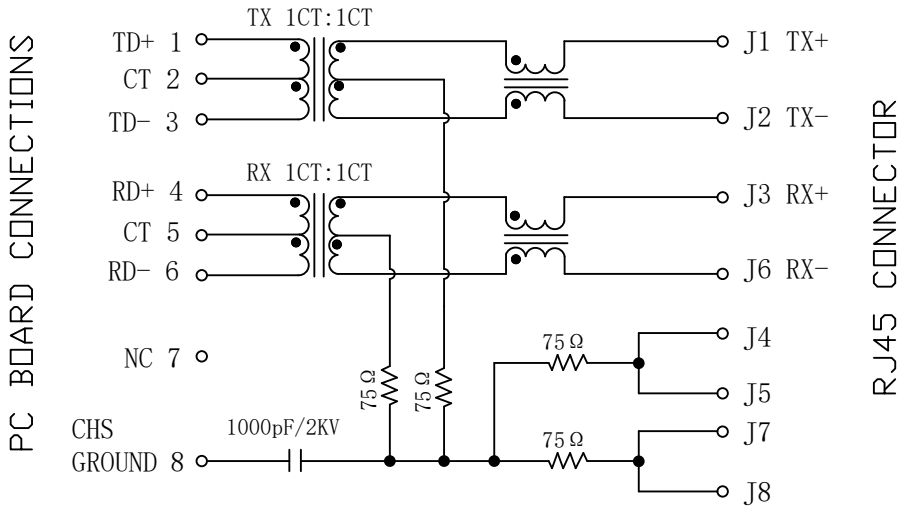

Electrical Specification:

Test notes(25±5℃)

1. TR:(100KHz,0.1V);
   TX=1CT:1CT±2% RX=1CT:1CT±2%
2. LX:(@100KHz,100mV,8mA,DC Bias)
   PINS:(1-3),(4-6)=350uH MIN
3. Transmitter filter & Receiver filter Type:
   Balance low pass 100Ω impedance
4. Hipot:
   Input(1-3) to Output(J1-J2):1500VAC 60sec
   Input(4-6) to Output(J3-J6):1500VAC 60sec
5. Insertion Loss:
   -1.0dB MAX @1～100MHz
6. Return Loss:
   -18dB MIN @1～30MHz
   -16dB MIN @30～60MHz
   -12dB MIN @60～80MHz
7. Cross Talk:
   -30dB MIN @1～100MHz
8. Common Mode Rejection:
   -30dB MIN @1～100MHz
9. Operating temperature: 0℃～70℃.

Emitting Color	λp(nm)	VF@IF=20mA	IR @VR=5V
YELLOW	585	1.8~2.6V	10μA max
GREEN	565	1.8~2.6V	10μA max

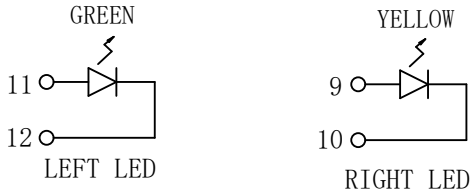

RoHS 2011/65/EU

X:X	±0.30	APPD:	LINK-PP INT'L TECHNOLOGY CO., LIMITED
X:XX	±0.25	CHKD:	TITLE: Vertical RJ45 Connector With 10/100 Magnetic
X:XXX	±0.05	DR: TOM	
ANGLES	±1°	UNIT: mm	PART NO.: LPJD0012BENL

SCALE:	SHEET:	REV:	DWG NO.:
3/1	1/2	A	LP15052131

Mechanical:

REV.	ECN NO.	DESCRIPTION	DATE	APPD
A	REL		2015-05-21	

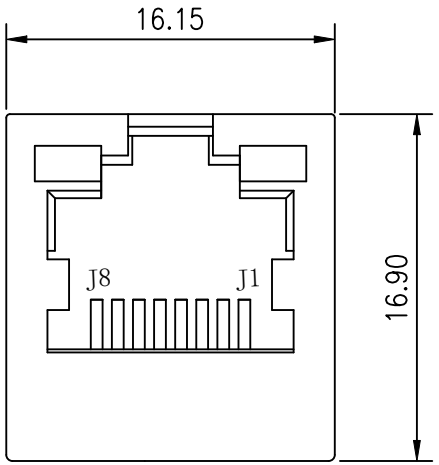

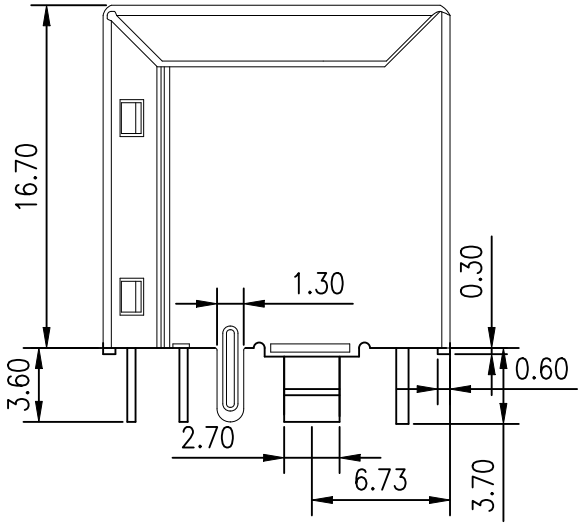

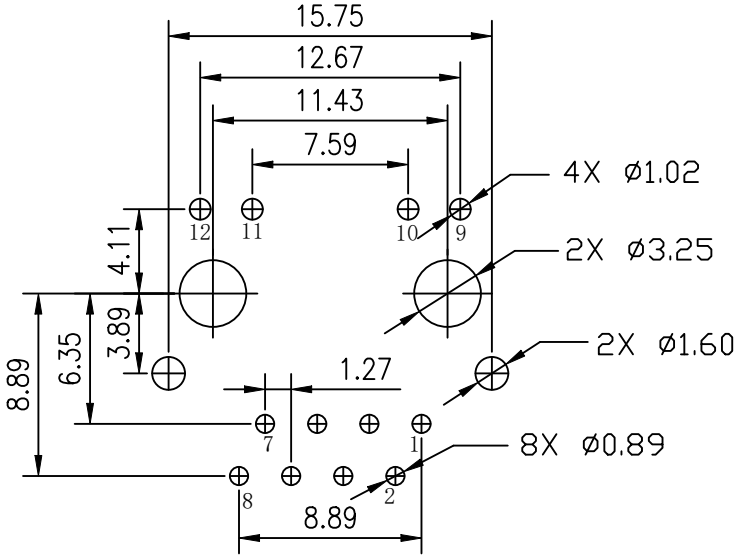

SUGGESTED PCB LAYOUT (TOP VIEW)

NOTES:

1. Meets IEEE 802.3 specification
2. Connector Materials:
   Housing Material:Thermoplastic PBT+30%G.F UL94V-0
   Contact Material:Phosphor Bonze C5210R-EH Thickness=0.35mm
   Pins:Brass C2680R-H Thickness=0.35mm
   Shield:SUS 304-1/2H Thickness=0.2mm
   Contact plating: Gold 6 micro-inches min.In contact area.
3. Wave solder tip temperature: 250℃ , 5 Sec.
4. UL Certification: File Number E484635.

RoHS 2011/65/EU

X:X	±0.30	APPD:	LINK-PP INT'L TECHNOLOGY CO., LIMITED
X:XX	±0.25	CHKD:	TITLE: Vertical RJ45 Connector With 10/100 Magnetic
X:XXX	±0.05	DR: TOM	
ANGLES	±1°	UNIT: mm	PART NO.: LPJD0012BENL

SCALE: 3/1	SHEET: 2/2	REV: A	DWG NO.: LP15052131	